Technical data sheet

0° socket, protective contact, triple

Item number: 6119753

Protective contact socket, triple 0°, with increased touch protection, with screwless terminals, 2-pin, 16 A, 250 V~, with connection terminals according to IEC 60884-1.

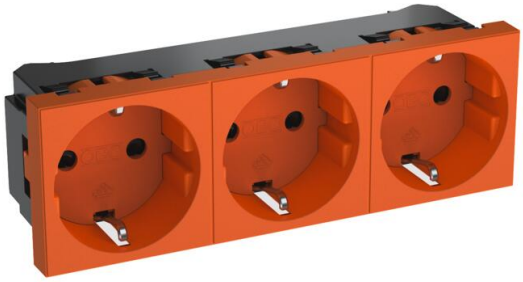

Polycarbonate Eco

Matt

Master data

Item number	6119753
Type	STD-D0N ROR3
Description 1	Socket 0°, triple
Description 2	protective contact
Manufacturer	OBO
Dimension	135x45x42
Colour	Pure orange; RAL 2004
Material	Polycarbonate Eco
Surface	Matt
Surface standard	
Smallest sales unit	1
Unit of quantity	Piece
Weight	9.5 kg
Weight unit	kg/100 pc.

Technical data sheet

0° socket, protective contact, triple

Item number: 6119753

Dimensions

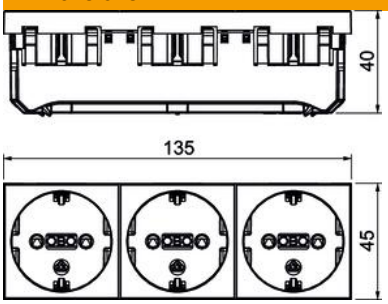

Width	135 mm
Height	45 mm

Technical data

Cover	Central plate
Closable	no
Connection type	Screwless terminal
Number of units	3
Number of modules (for modular construction)	0
Number of switchable sockets	0
Number of poles	2
Printed label/coding	Without printing
Version for	Triple 0°
Surface version	Matt
Version for	SCHUKO
Ejection mechanism	no
Fastening type	Lock
Labelling panel	no
Operating temperature, max.	40 °C
Operating temperature, min.	-5 °C
increased touch protection	yes
Error current protection	no
For more difficult conditions (according to VDE)	no
Power reserve	no
Halogen-free	yes
Insulated installation	no
Hinged cover	no
Coding	no
Warning light	no
With on/off switch	no
With fine-wire fuse	no
With functional lighting	no
With orientation lighting	no
Mounting type	Device installation duct
Nominal voltage	250 V
Nominal current	16 A
ROHS-conformant	yes
Protection rating	Other
Special power supply	Without special power supply
Socket version	Protective contact
Socket angle	0°

Technical data

Transparent	no
Rotated central insert	no
Surge protection	no